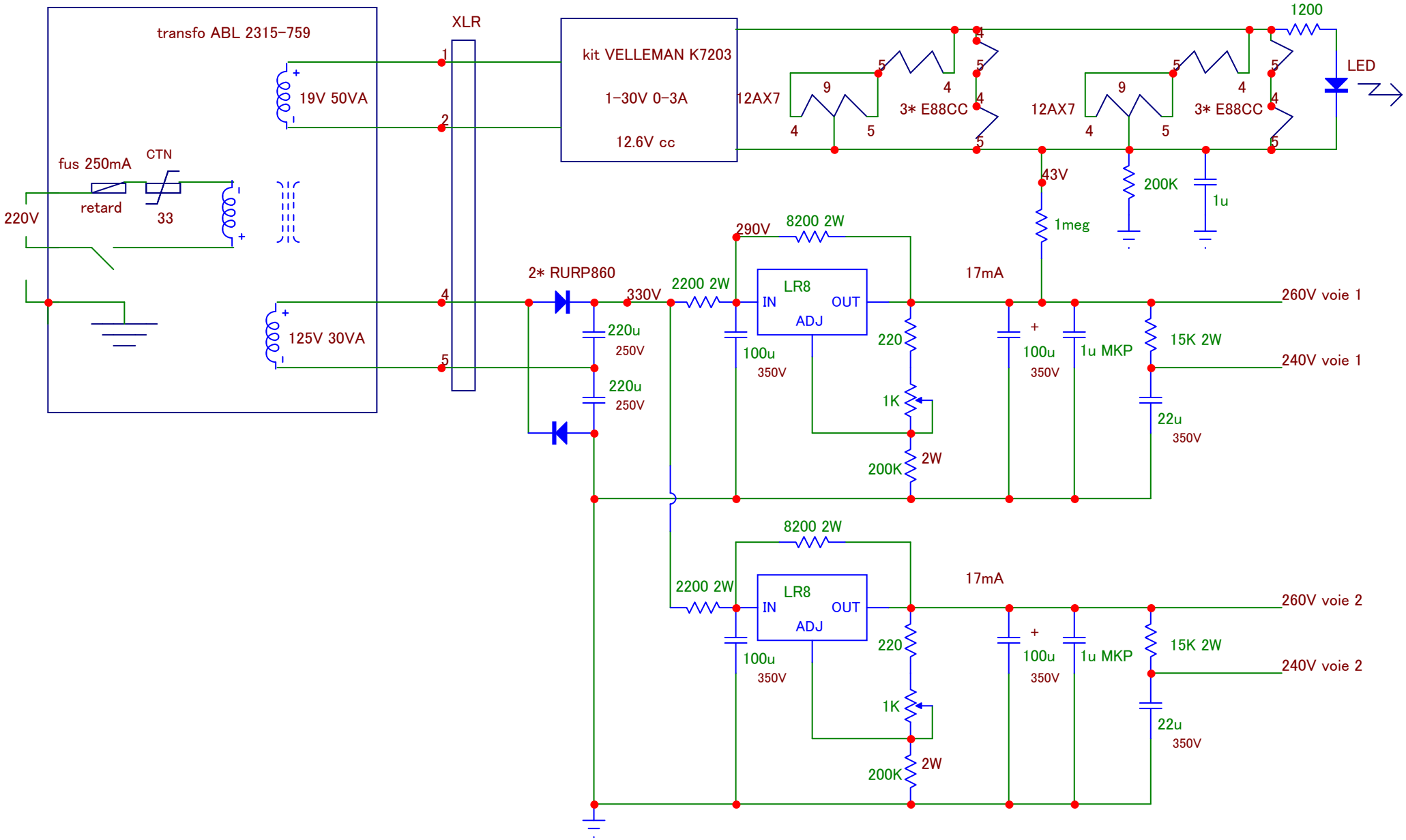
transfo ABL 2315-759
19V 50VA
125V 30VA
fus 250mA
retard
CTN
33
220V
XLR
1
2
4
5
kit VELLEMAN K7203
1-30V 0-3A
12.6V cc
12AX7
3* E88CC
12AX7
3* E88CC
1200
LED
43V
1meg
200K
1u
290V
8200 2W
2* RURP860
330V
2200 2W
LR8
IN
OUT
ADJ
17mA
260V voie 1
240V voie 1
220u
250V
220u
250V
100u
350V
220
1K
200K
2W
100u
350V
1u MKP
15K 2W
22u
350V
8200 2W
2200 2W
LR8
IN
OUT
ADJ
17mA
260V voie 2
240V voie 2
100u
350V
220
1K
200K
2W
100u
350V
1u MKP
15K 2W
22u
350V